MODEL	YAMAHA FZ1 / FZ1 FAZER	YEAR	2006-->>	SCHEMATIC
LINE	SPORT	MUFFLER	SPEED EDGE	

ELENCO PARTI / PARTS LIST

#	QTÀ / QTY	DESCRIZIONE / DESCRIPTION	CODICE / CODE
1	1	Vite M5 x 8 / Screw M5 x 8	50.73.459.1
2	1	DB killer / DB killer	50.DK.064.0
3	1	Tappo in gomma / Rubber stopper	50.73.266.1
4	1	Silenziatore / Muffler	SPEED EDGE 350
5	1	Staffa in carbonio / Carbon fiber bracket	50.SS.663.1
6	1	Dado 8 MA flangiato / Flanged nut 8 MA	50.73.393.1
7	2	Boccola / Bush	50.73.381.1
8	2	Silentblock / Silentblock	50.73.380.1
9	1	Rondella alluminio / Aluminium washer	50.73.291.1
10	1	Vite M8x50 / Screw M8x50	50.73.074.1
11	1	Tubo di raccordo / Link pipe	9773Y023SHX
12	1	Fascetta Ø 60/63 mm / Pipe clamp Ø 60/63 mm	50.FA.010.1
13	2	Molla media / Middle spring	50.73.359.1
14	2	Tubo in gomma per molla / Rubber pipe for spring	50.73.210.1

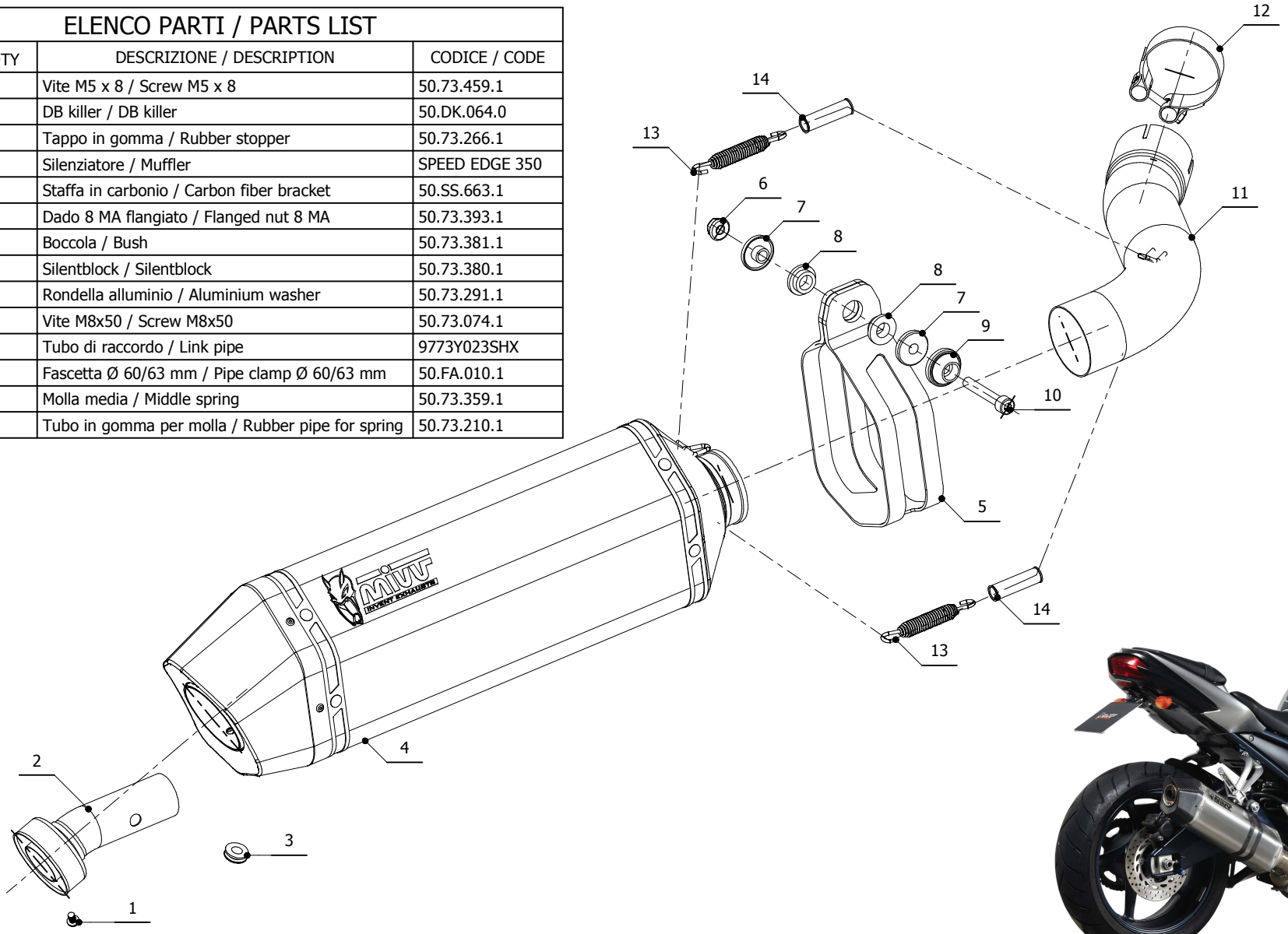

APPLICAZIONI / APPLICATIONS

CODICE / CODE	TUBO / PIPE	SILENZIATORE / MUFFLER	FASCETTA / CLAMP	CODICE OMOL. / HOMOL. CODE
Y.023.LHX	INOX / ST. STEEL	INOX (COPPE CARBONIO) / ST. STEEL (CARBON CAPS)	CARBONIO / CARBON FIBER	ME047 e9 1356