MODEL	BMW F 800 GS / F 650 GS	YEAR	2008-->	SCHEMATIC
LINE	SPORT	MUFFLER	SPEED EDGE	

ELENCO PARTI / PARTS LIST

#	QTÀ / QTY	DESCRIZIONE / DESCRIPTION	CODICE / CODE
1	1	Tubo di raccordo / Link pipe	9773B007SHX
2	2	Molla lunga / Long spring	50.71.080.1
3	2	Tubo in gomma per molla / Rubber pipe for spring	50.73.210.1
4	1	Staffa in carbonio / Carbon fiber bracket	50.SS.663.1
5	2	Boccola / Bush	50.73.381.1
6	2	Silentblock / Silentblock	50.73.380.1
7	1	Rondella in alluminio nera / Black aluminium washer	50.73.221.1
8	1	Vite M8x40 / Screw M8x40	50.73.075.1
9	1	Silenziatore INOX / ST.STEEL muffler	9773SEIX00008
10	1	Tappo in gomma / Rubber stopper	50.73.266.1
11	1	DB killer / DB killer	50.DK.068.0
12	1	Vite M5 x 8 / Screw M5 x 8	50.73.459.1

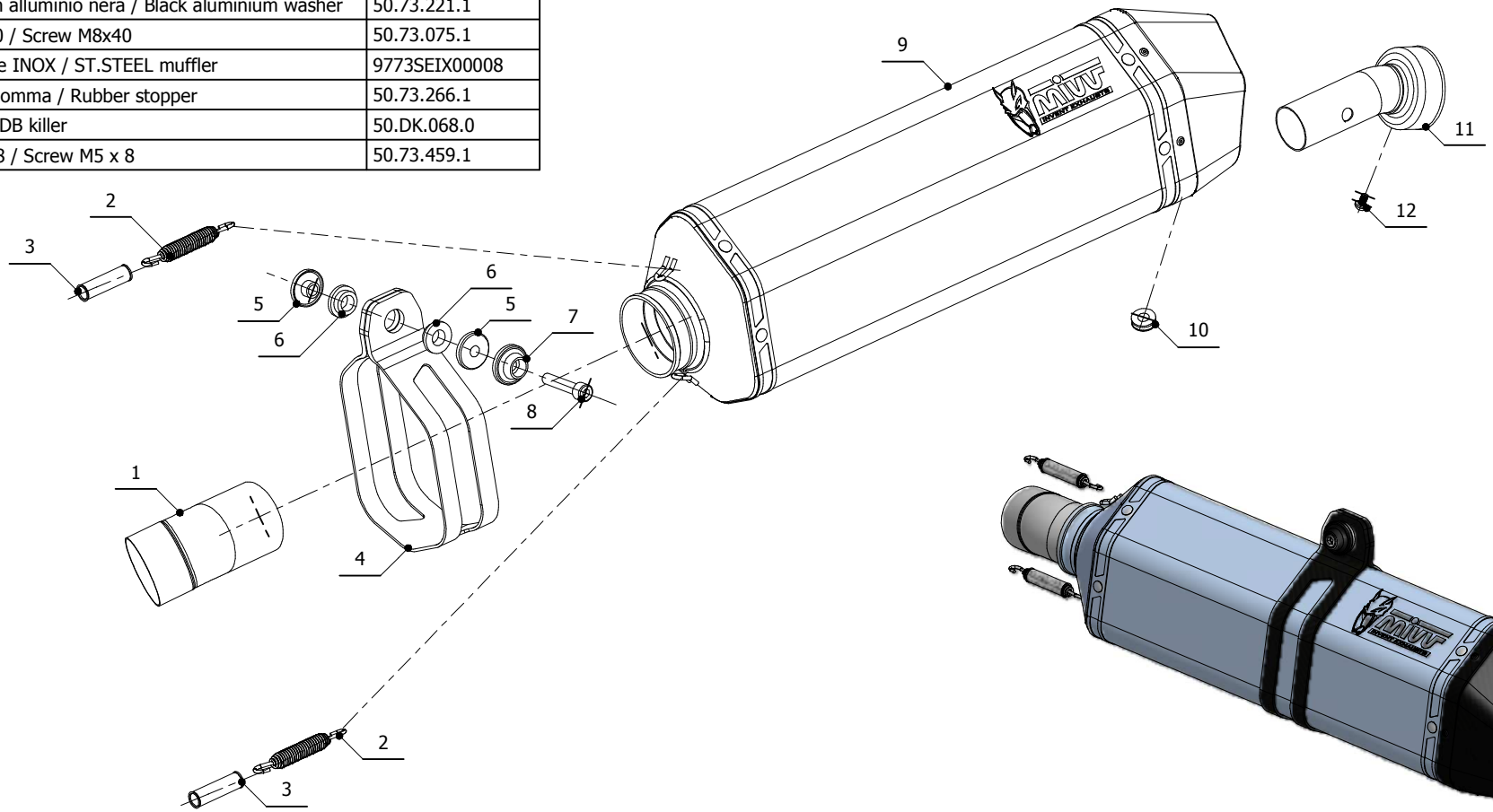

APPLICAZIONI / APPLICATIONS

CODICE / CODE	TUBO / PIPE	SILENZIATORE / MUFFLER	FASCETTA / CLAMP	CODICE OMOL. / HOMOL. CODE
B.007.LHX	INOX / ST. STEEL	INOX (COPPE CARBONIO) / ST. STEEL (CARBON CAPS)	CARBONIO / CARBON FIBER	ME008 e9 1176