Disc Brake Pads GOLD fren®

AD | S3 RACING | GP5 | GP6 | GP7 | S33 RACING

PART NUMBER
070

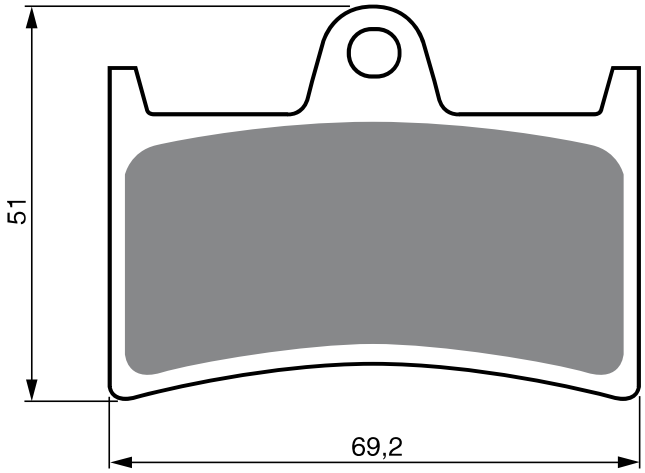

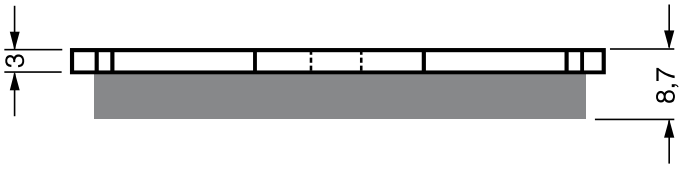

YAMAHA

		Fazer 8 (Top Fairing/Twin Headlight)	10-	2F
TZR	125	R	94	F
TZR	125		94	F
FZR	250	R	89-99	2F
R1-Z	250		90-	F
TZR	250	(2MA/E508)	89-92	2F
FZR	400	R	91-	2F
XP	500	T-Max	08-	2F
FZ6	600	Fazer S2	07-	2F
FZ6	600	Fazer S2 (ABS 4 piston caliper)	07-09	2F
FZ6	600	S2	07-	2F
FZ6	600	S2 ABS (Naked)	07-	2F
FZS	600	Fazer (RJ02/H988)	98-	2F
FZS	600	S Fazer	01-03	2F
YZF	600	R Thunder Cat (4TV/H441)	96-03	2F
YZF	600	R-6	05-07	2F
YZF	600	R6 (13S1)	08-	2F
YZF	600	R6 (RJ03/K265)	99-02	2F
YZF	600	R-6 (RJ05/E13/0060)	03-04	2F
YZF	600	R6S	06-07	2F
YZF	600	RRR (R6)	03-04	2F
YZF	750	R7 OW02 (RM01/)	99-00	2F
FZ8	800	(Single Headlight)	10-	2F
FZ8	800	N-Naked/Single Headlight/ ABS (RN256/59P1)	11-	2F
FZ8	800	N-Naked/Single Headlight/ Non ABS (RN255/39P1)	11-	2F
FZ8-S	800	Fazer 8 (Top fairing/Twin headlight/Non ABS) (RN251/42P1)	11-	2F
FZ8-SA	800	Fazer 8 (Top fairing/Twin headlight/ ABS) (RN252/1BD1)	11-	2F
TDM	900	AT/AV/AW/AX (ABS)	05-	2F
TDM	900	P/R/S/T/V/W/X	02-08	2F
FZ1	1000	Fazer	07-	2F
FZ1	1000	N/NV (2D11/2/3)	06-07	2F
FZ1	1000	S/FZ1-SV	06-07	2F
FZS	1000	Fazer	01-05	2F
YZF	1000	R Thunder Ace (4VD/H443)	96-02	2F
YZF	1000	R1	02-03	2F
YZF	1000	R1 (Rad. cal)	04-06	2F
YZF	1000	R1 (RN01/H917)	98-01	2F
YZF	1000	R1 50th Anniversary	06	2F
YZF	1000	R1SP	06	2F
BT	1100	P/R Bulldog	02-06	2F
XT	1200	Z Super Ténéré	10-	2F
FJR	1300	R/AR/S/AS (ABS)	03-05	2F
FJR	1300		01-02	2F
XJR	1300	(RP02/K266)	99-01	2F
XJR	1300	N/P (5EAP/5EAR/5EAS/5EAT/ 5EAW/5EAV/5EAY)(298 mm front disc)	01-02	2F
XJR	1300	SP	01-	2F
XJR	1300	T/V/W (5WMA/5WMC/ 5WMD/5WMF)	05-	2F
MT-01	1700	(Rad. cal)	05-06	2F
XV	1700	PCP/PCPC/PCR/Road Star Warior	02-05	2F
XVS	1900	Midnight Star	06-	2F