MODEL	KYMCO X-CITING 400	YEAR	2013	SCHEMATIC
LINE	SPORT	MUFFLER	STRONGER	

ELENCO PARTI / PARTS LIST

#	QTÀ / QTY	DESCRIZIONE / DESCRIPTION	CODICE / CODE
1	1	Vite M6 x 8 / Screw M6 x 8	50.72.026.1
2	1	Rondella M6 / Washer M6	50.73.131.1
3	1	DB killer / DB killer	50.DK.069.0
4	1	Tappo in gomma / Rubber stopper	50.73.266.1
5	1	Silenziatore / Muffler	STRONGER 430
6	1	Staffa in carbonio / Carbon fiber bracket	50.SS.664.1
7	1	Distanziale in alluminio / Aluminium spacer	50.SS.061.1
8	2	Boccola / Bush	50.73.667.1
9	2	Silentblock / Silentblock	50.73.380.1
10	1	Rondella in alluminio nera / Black aluminium washer	50.73.330.1
11	1	Vite M10x60 / Screw M10x60	50.73.374.1
12	1	Tubo di raccordo / Link pipe	9773O004S2
13	1	Tappo per sonda lambda / Stopper for lambda probe	50.73.111.1
14	2	Dado 8 MA flangiato / Flanged nut 8 MA	50.73.393.1
15	2	Molla media / Middle spring	50.73.359.1
16	2	Tubo in gomma per molla / Rubber pipe for spring	50.73.210.1

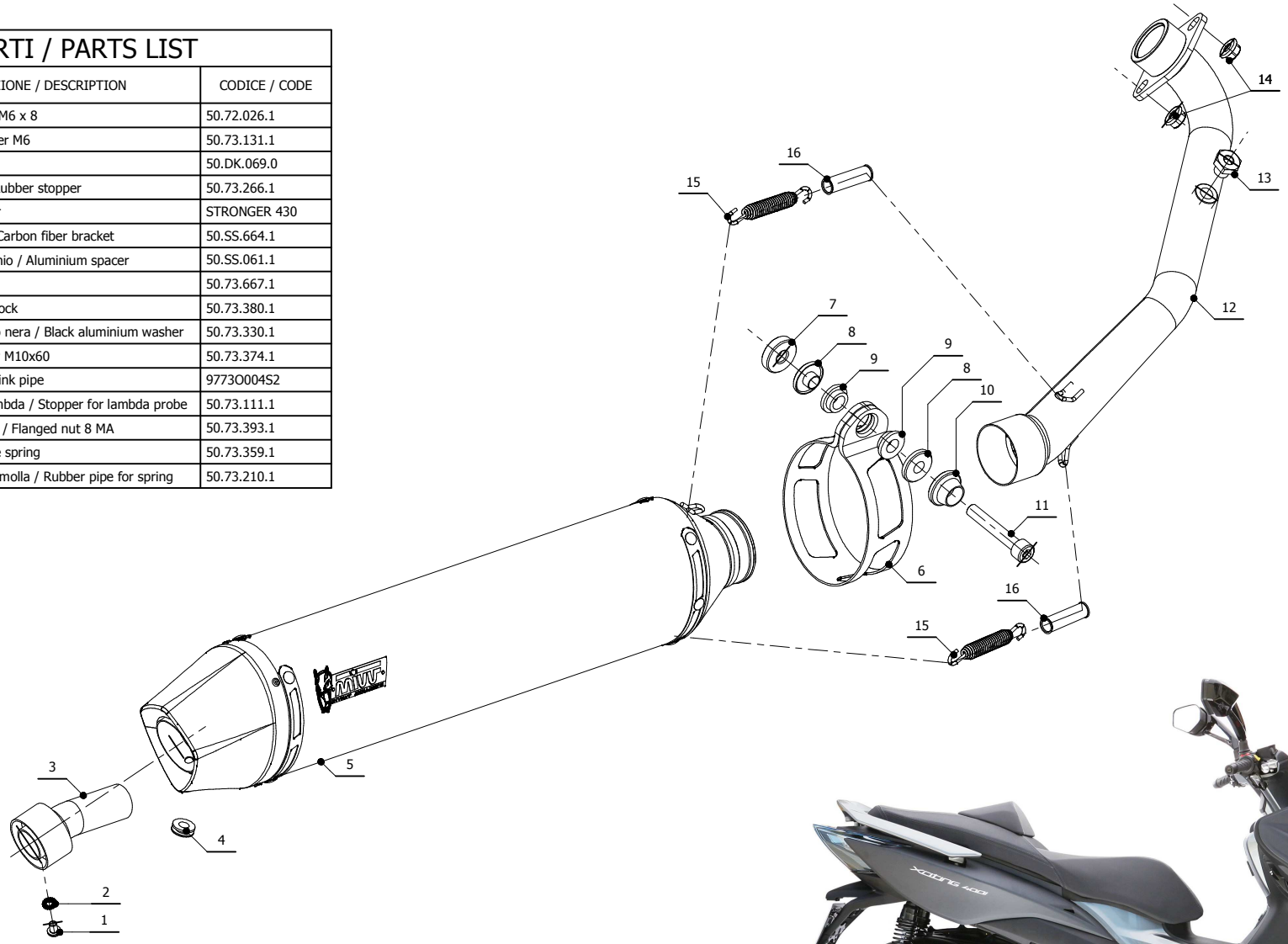

APPLICAZIONI / APPLICATIONS

CODICE / CODE	TUBO / PIPE	SILENZIATORE / MUFFLER	FASCETTA / CLAMP	CODICE OMOL. / HOMOL. CODE
O.004.LBSC	INOX / ST. STEEL	STEEL BLACK	CARBONIO / CARBON FIBER	ME041 e9 1309